NOTES:
Rated Current: 15 AMP
Rated Voltage: 300 V
Contact Resistance: 15 mΩ max
Withstand Voltage: 2000 V AC/DC
Insulation Resistance: 500 MΩ min DC500V
Operation Temperature: −40℃ to +105℃
Torque value: 0.5N.m
Operation Temperature: −40℃ to +105℃
Storage Temperature: −10℃ to +40℃

激光打"WCON"LOGO: 2#(W=5.65, H=1.20) A1

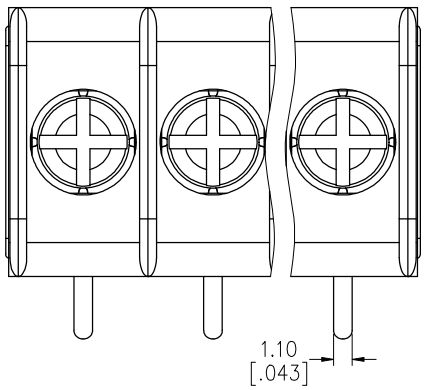

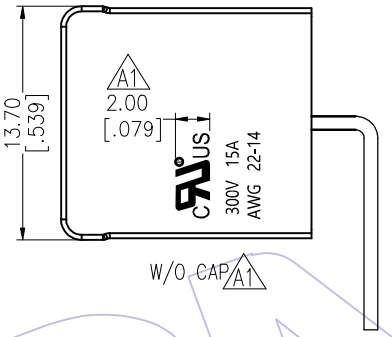

Recommended P.C.B Layout(Top Side)
(PCB BOARD TOLERANCE±0.05)

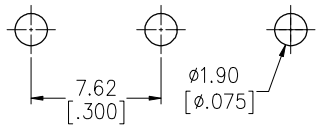

Ordering Information:

BH762- XX R XX X N X 01 N (A1)

- No.of Pins: 02-33P
- Contact Plated: SN=Bright Tin
- Color: B=Black
- Contact Plated: W=W/T CAP, N=W/O CAP
- Blank=W/T WCON, N=W/O WCON

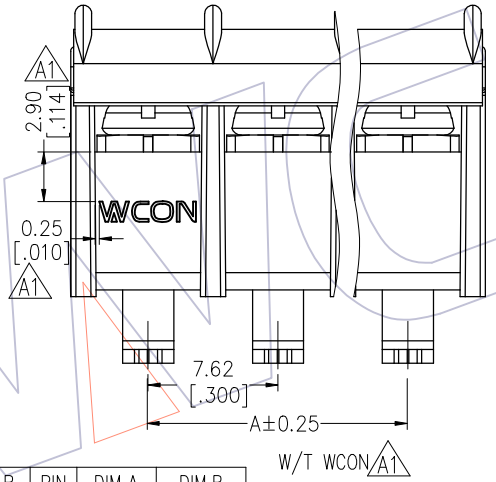

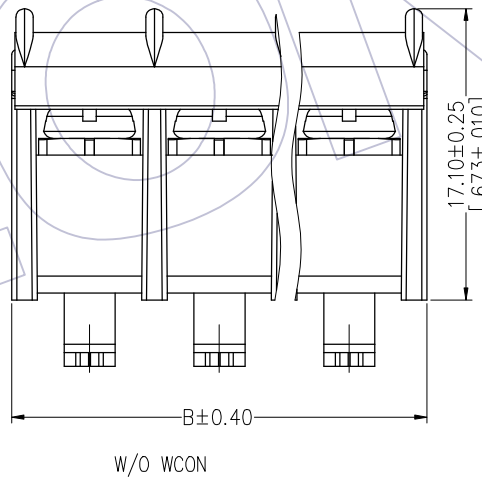

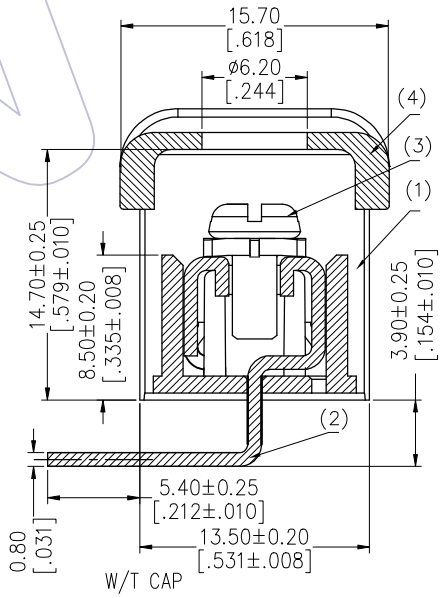

A1

PIN	DIM.A	DIM.B	PIN	DIM.A	DIM.B	PIN	DIM.A	DIM.B	PIN	DIM.A	DIM.B
2	7.62	16.74	10	68.58	77.70	18	129.54	138.66	26	190.50	199.62
3	15.24	24.36	11	76.20	85.32	19	137.16	146.28	27	198.12	207.24
4	22.86	31.98	12	83.82	92.94	20	144.78	153.90	28	205.74	214.86
5	30.48	39.60	13	91.44	100.56	21	152.40	161.52	29	213.36	222.48
6	38.10	47.22	14	99.06	108.18	22	160.02	169.14	30	220.98	230.10
7	45.72	54.84	15	106.68	115.80	23	167.64	176.76	31	228.60	237.72
8	53.34	62.46	16	114.30	123.42	24	175.26	184.38	32	236.22	245.34
9	60.96	70.08	17	121.92	131.04	25	182.88	192.00	33	243.84	252.96

A1

ITEM	PART	P/N	Q'TY	Material	NOTES
(4)	CAP	CAP762-G1XX	1	PC	
(3)	Screw	MB030-2SNI02	XX	M3.0*7.9,C1018/C1010	
(2)	TERM.	TBP071-BSN001C	XX	C2680 L=23.8,T=0.8	
(1)	Plastic	GBH762-XXB3BN01N	1	PA66+25%G.F UL94-V0	

REV	DATE	MODIFICATION DESCRIPTION	CHANGE
A1	2021/03/15	Add UL Logo; Add W/O CAP&W/T WCON SPEC&P/N	XSR
A0	2015/09/16	NEW	——

OPERATION	
X.X	±0.40
X.XX	±0.25
X.XXX	±0.15
Angle	± 3°
DIM	TOL

DRAW	XSR	DATE	2021/03/15
CHECK		DATE	
APPROVE		DATE	

SCALE	FIT
UNIT	mm / inch
SIZE	A4
SHEET	1/1
PROJ.	

PART NO. BH762-XXRXXXNX01(N) A1

TITLE: 7.62mm, Single-Row, C Type, W=13.50, H=14.70 Barrier Terminal Blocks

Customer NO.

WCON
Http: www.wcon.com

WCON-Dongguan
Tel: +86 769 85358920
Fax: +86 769 85358915
E-mail: sales@wcon.com

WCON-Kunshan
Tel: +86 512 57468408
Fax: +86 512 57468468
E-mail: salesks@wcon.com